Meade Instruments Corporation
Telescopes · Binoculars · Microscopes

ETX Astro Telescope Instruction Manual

INTRODUCTION

IMPORTANT NOTICE! Never use a telescope or spotting scope to look at the Sun! Observing the Sun, even for the shortest fraction of a second, will cause irreversible damage to your eye as well as physical damage to the telescope or spotting scope itself.

The Meade ETX is an extremely versatile, high-resolution telescope designed for everyone. Unlike larger or more specialized telescopes that might appeal only to the advanced amateur astronomer, the ETX is an easy-to-operate telescope with fingertip controls, an internal motor drive for automatic tracking of astronomical objects, and one of the finest optical systems ever manufactured for a commercial telescope. As a first telescope, the ETX reveals nature in an everexpanding level of detail: observe the feather structure of a bird from 50 yards or study the rings of the planet Saturn from a distance of 800 million miles. The Meade ETX is an instrument fully capable of growing with the user's interests. For many, the ETX is all the telescope ever required. As a second telescope for the amateur astronomer who may already own a larger instrument, the ETX represents extreme portability without sacrificing the most demanding requirements for optical quality and field performance. The result of more than five years in development by an elite team of Meade optical designers and engineers, the Meade ETX is, without question, one of the most revolutionary telescopes to be developed in the past 25 years. We urge the ETX user to read this manual thoroughly, in order that you might avail yourself of all the designed-in features at your disposal with this amazing instrument.

Fig. 1: The ETX Astro Telescope

1. Eyepiece
2. Viewfinder Alignment Screws
3. Viewfinder
4. 90° Eyepiece Holder
5. Focus Knob
6. Photo Port
7. Flip-Mirror Control Knobs
8. 1/4-20 Photo Tripod Adapter Block
9. Fork Mount
10. R.A. Slow-Motion Control
11. R.A. Lock
12. Attachment Holes for Fixed Tripod Legs
13. Bottom Surface of Drive Base
14. Drive Base
15. R.A. (Right Ascension) Setting Circle
16. Dec Slow-Motion Control
17. Declination Pointer
18. Dec (Declination) Setting Circle
19. Screws for Attaching Optical Tube to Fork Mount
20. Declination Cover Plate
21. Declination Lock

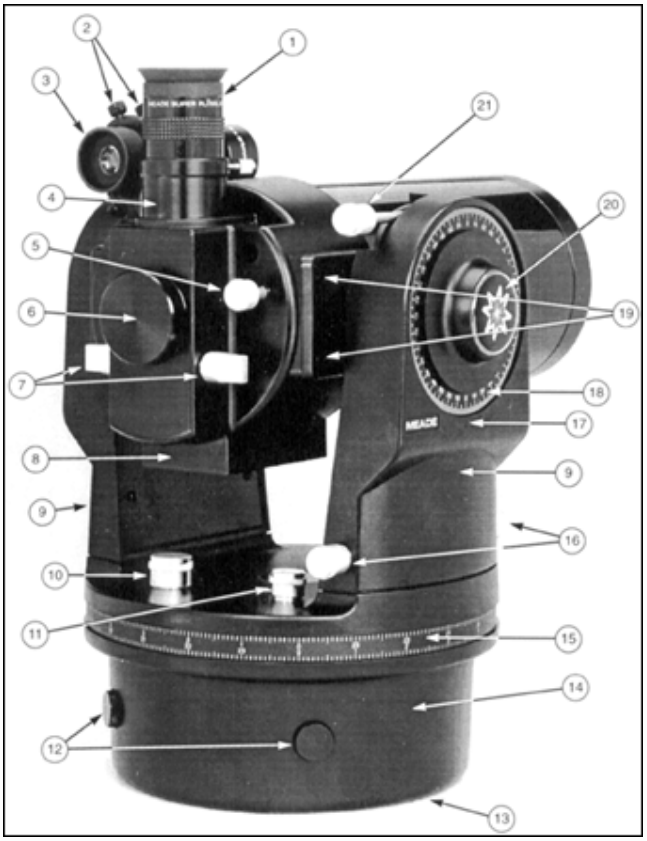

GETTING STARTED

1.Parts Listing

In keeping with the ETX philosophy of elegant simplicity, the ETX is virtually completely assembled at the Meade factory; getting the telescope ready for first observations requires only a few minutes. When first opening the packing box, note carefully the following parts included with the ETX Astro Telescope:

- The ETX Astro Telescope with fork mount system.
- 8 x 21mm Viewfinder, packed in a separate, small box.
- Super Plössl (SP) 26mm eyepiece, packed in plastic storage container.
- Table Tripod legs (3 pcs), packed in a plastic bag.
- Hex-wrench set with 3 (English-format) wrenches, packed with the manual.
- The 8 x 21mm Viewfinder is packed separately from the main telescope in shipment to avoid the possibility of the viewfinder slipping in its bracket and scratching the viewfinder tube.

2. Assembly Instructions

For assembly, have at your access a Phillips-head screwdriver and three AA-size batteries. Basic assembly of the telescope requires only a few steps:

NOTE. The viewfinder should be checked for correct focus prior to installation in the viewfinder bracket. See telescope use, point 5a, below.

a. Slide the viewfinder into its bracket (5, Fig. 2) with the rubber-eyecup-end of the viewfinder fitting first through the front end of the bracket. It may be necessary to slightly unthread the six alignment screws (4 and 6, Fig. 2) to fit the viewfinder into the bracket. With the viewfinder inside the bracket, tighten (to a firm feel only) the six alignment screws down against the viewfinder tube. Alignment of the viewfinder is detailed in this manual.

b. Remove the SP 26mm eyepiece (1, Fig. 1) from its plastic storage container and place it in the telescope's eyepiece holder (4, Fig. 1) tightening the eyepiece- holder's thumbscrew to a firm feel only.

c. With the telescope lying on your lap or on the floor, use a Phillips-head screwdriver to remove the three screws (1, Fig. 3) that attach the metal base plate (5, Fig. 3) to the bottom of the drive base (6, Fig. 3). Thread the center tripod leg (the leg with the latitude scale) in to the central hole (3, Fig. 3) of the metal base plate. Then, using the tripod leg to hold the base plate, carefully pull the base plate from the drive base.

d. Insert three AA-size batteries in the battery clips located inside the drive base (be careful to avoid touching the thin wires leading from the battery mounting board to the motor). Orient the batteries as shown on the battery mounting board (Fig. 4). Then re-attach the metal base plate to the bottom of the drive base using the three screws (1, Fig. 3). Unthread the center tripod leg. Basic assembly of the ETX is now complete.

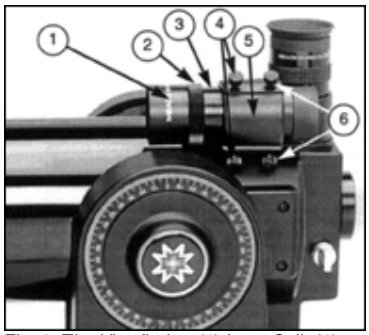

Fig. 2: The Viewfinder. (1) Lens Cell; (2) Knurled Lock- Ring; (3) Viewfinder; (4) Front Alignment Screws; (5) Viewfinder Bracket; (6) Rear Alignment Screws.

TELESCOPE USE

1. Quick Tips

- **Viewfinder Alignment with Main Telescope:** When first attached to the telescope, the viewfinder and main optical tube are not aligned. Therefore, it is not possible to locate objects in the main telescope using the viewfinder. Procedures for aligning the viewfinder and main telescope are discussed below.
- **Declination and R.A. Controls:** With the ETX sitting on a table, as shown in Fig. 1, the Declination controls are used to move the telescope vertically (up and down). The Right Ascension controls are used to move the telescope horizontally (side to side). Move Knobs Slowly: When making adjustments in R.A., Dec, or focusing, turn the controls slowly. Moving the controls too quickly may result in losing the object or passing the focus point. Moving the ETX Astro Telescope: The ETX optical tube is not designed to rotate a full 360° through its fork arms. The viewfinder bracket contacts one of the fork arms at a point just past the 90° position of the optical tube in the fork arms. Do not attempt to force the telescope tube past this point or damage to the viewfinder bracket will result.
- **A Note on Indoor Viewing:** While casual, low-power observations may be made with the telescope through an open or closed window, the best observing is always done outdoors. Temperature differences between inside and outside air and/or the low quality of most home window glass can cause blurred images through the telescope. Do not expect high-resolution imaging under these conditions.

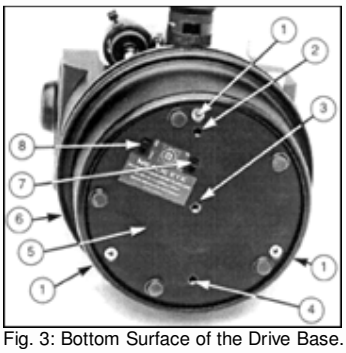

Fig. 3: Bottom Surface of the Drive Base. (1) Attachment Screws; (2) Upper Hole; (3) Center Hole; (4) Lower Hole; (5) Base Plate; (6) Drive Base; (7) North-South Switch; (8) On-Off Switch.

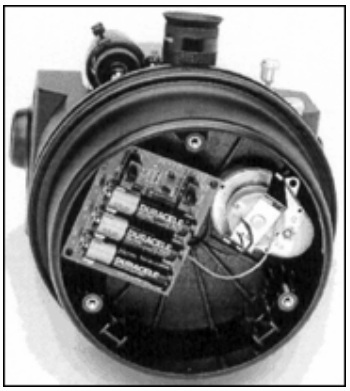
Fig. 4: Showing three AA-size batteries installed inside the drive base.

2. Telescope Controls

An important array of controls facilitates operation of the ETX telescope. Be sure to acquaint yourself with all of these controls before attempting observations through the telescope.

R.A. Lock (11, Fig. 1): With the ETX sitting on a table as shown in Fig. 1, this control locks the telescope from moving horizontally. Turning the R.A. Lock counterclockwise unlocks the telescope horizontally, enabling the telescope to be freely moved by hand in a horizontal direction. Turning the R.A. Lock clockwise locks the telescope in horizontal position.

R.A. Slow-Motion Control (10, Fig. 1): With the R.A. Lock in the unlocked position, the R.A. Slow-Motion Control may be used for manual slewing of the telescope in a horizontal direction. ***The R.A. Slow-Motion Control should never be turned when the R.A. Lock is in the locked position; damage to the internal gears may otherwise result.*** The R.A. Lock must be engaged for the motor drive to track on an object.

Dec Lock (21, Fig. 11): With the ETX sitting on a table as shown in Fig. 1, this control locks the telescope from moving vertically. (The definition of "Dec," or "Declination," is explained further below.) Turning the Dec Lock clockwise (to a firm feel only) locks the telescope in the vertical position. Turning the Dec Lock about one full turn counterclockwise permits manual motion of the telescope in the vertical position.

Dec Slow-Motion Control (16, Fig. 1): With the Dec Lock in the locked position, the Dec Slow-Moton Control may be used for fine motions of the telescope in a vertical direction. The Dec Slow-Motion Control has a fixed travel length. At some point after turning the Dec Slow-Motion Control continuously in the same direction, the control will become difficult to turn. ***Do not attempt to turn the Dec Slow-Motion Control past this point or damage to the internal mechanism will result.*** Instead, back-off the Dec Slow-Motion Control by turning the control about 50 turns in the opposite direction. Unlock the Dec Lock and move the telescope manually to center the object; then resume use of the Dec Slow-Motion Control.

Focus Knob (5, Fig. 1): Turning this knob causes a finely controlled internal motion of the telescope's primary mirror to achieve precise focus of the image. The ETX can be focused on objects from a distance of about 11.5 ft (3.5m) to infinity. Rotate the focus knob clockwise to focus on distant objects; rotate the focus knob counterclockwise to focus on near objects.

Flip-Mirror Control (7, Fig. 1): The ETX includes an internal optically-flat mirror. The Flip-Mirror Control is in the "up" position when the control is vertical (perpendicular to the main telescope tube). It is "down" when the outer edge of the control is horizontal (parallel with the main tube of the telescope).

With the Flip-Mirror Control in the "up" position, light is diverted, at a 90° angle, to the eyepiece. Alternately, with the Flip-Mirror Control in its "down" position, light proceeds straight through the telescope and out the Photo Port (6, Fig. 1), for photography using the #64 T-Adapter, or for observing with the #932 45° Erecting Prism.

3. Magnification

The magnification, or power, at which a telescope is operating is determined by two factors: the focal length of the telescope and the focal length of the eyepiece employed.

Telescope Focal Length: Generally speaking, telescope focal length is the distance that light travels inside the telescope before reaching a focus. In the mirror-lens design of the ETX, however, this focal length is, in effect, compressed by the telescope's secondary mirror, so that a long effective telescope focal length is housed in the short ETX optical tube. The ETX's focal length is 1250mm, or about 49". If the ETX were a classical refracting-type of telescope, its optical tube would thus be more than four feet long instead of the ETX's compact 11" tube length. Eyepiece Focal Length: The eyepiece focal length is the distance light travels inside the eyepiece before reaching focus. Focal length is usually printed on the side of the eyepiece. The Meade ETX is supplied with one eyepiece as standard equipment, a Super Plössl (SP) 26mm eyepiece. Thus, the focal length of the provided eyepiece is 26mm. "Super Plössl" refers to the optical design of the eyepiece, a design specifically intended for high-performance telescopes and one which yields a wide, comfortable field of view with extremely high image resolution.

Technical note to the advanced amateur astronomer: *The SP 26mm eyepiece supplied with Meade ETX telescopes is a special low-profile version of the standard Meade SP 26mm eyepiece and is about 114" (6mm) shorter than the standard eyepiece. This low-profile SP 26mm is designed to harmonize with the ultracompact scale of the ETX telescope and utilizes the exact same optics as the standard SP 26mm eyepiece. The SP 26mm low-profile eyepiece is not parfocal, however, with other eyepieces in the SP series (i.e., the eyepiece requires refocusing when it is interchanged with other SP eyepieces).*

Calculating Magnification: On a given telescope, such as the ETX, different eyepiece focal lengths are used to achieve different magnifications, from low to high. The standard equipment SP 26mm eyepiece, as stated above, yields 48X. Optional eyepieces and the #126 2X Barlow Lens are available for powers from 31X to over 300X. To calculate the magnification obtained with a given eyepiece, use this formula:

$$\text{Power} = \frac{\text{Telescope Focal Length}}{\text{Eyepiece Focal Length}}$$

Example: The power obtained with the ETX with the SP 26mm eyepiece is:

$$\text{Power} = \frac{1250\text{mm}}{26\text{mm}} = 48\text{X}$$

The most common mistake of the beginning observer is to "overpower" the telescope by using high magnifications which the telescope's aperture and typical atmospheric conditions can not reasonably support. Keep in mind that a smaller, but bright and well-resolved image is superior to one that is larger, but dim and poorly resolved. Powers above 300X should be employed with the ETX only under the steadiest atmospheric conditions.

Most observers will want to have 3 or 4 eyepieces and the #126 2X Barlow Lens to achieve the full range of reasonable magnifications possible with the ETX.

4. First Observations

Unthread the metal dust cap from the front lens, and the ETX Astro Telescope may now be used for terrestrial (land) observing. Keep in mind, however, that the viewfinder has not been aligned, and it will be necessary to locate objects simply by sighting along the main telescope tube. With the SP 26mm eyepiece inserted in to the telescope's eyepiece holder, the telescope is operating at 48-power (written "48X"). Objects viewed through the eyepiece will be correctly oriented up-and-down in the telescope but will be reversed left-for-right. Image orientation is discussed in more detail below. The Flip-Mirror Control (7, Fig. 1) must be in the "up" position in order to observe a correctly-oriented image through the telescope.

After familiarizing yourself with the telescope's controls, make your first observations of a simple land object7mdash;a telephone pole or building, perhaps, several hundred yards in the distance. Sight along the side of the telescope's main tube to locate the object. Practice focusing on the object and centering it in the field of view using the R.A. Slow-Motion Control and Dec Slow Motion Control.

Note: The dust cap should be replaced after each observing session.

5. The Viewfinder

The ETX, as with almost all astronomical telescopes, presents a fairly narrow field of view to the observer. As a result it is sometimes difficult to locate and center objects in the telescope's field of view. The viewfinder, by contrast, is a lowpower, wide-field sighting scope with crosshairs that enable the easy centering of objects in the main telescope's field. Standard equipment with the ETX is a viewfinder of 8-power and 21mm aperture, called an "8 x 21mm viewfinder." The ETX viewfinder, unlike most telescope viewfinders, presents a correctly oriented image, both up-and-down and left-to-right. This orientation particularly facilitates the location of terrestrial objects. The 8 x 21mm viewfinder is also a tremendous aid in locating faint astronomical objects before their observation in the main telescope.

a. Focusing the Viewfinder

The ETX viewfinder has been factory pre-focused to objects located at infinity. Individual eye variations, however, may require that the viewfinder be re-focused for your eye. Prior to installing the viewfinder in the viewfinder bracket (5, Fig. 2), check the focus by looking through the viewfinder. Point the viewfinder at a distant object; if the viewfinder image is not sufficiently in focus for your eye, it may be re-focused as follows:

1. Loosen the knurled lock-ring (2, Fig. 2) located near the viewfinder's objective (front) lens (1, Fig. 2). Unthread this ring (counterclockwise, as seen from the eyepiece- end of the viewfinder) by several full turns.
2. Focus the viewfinder by rotating the objective lens cell (1, Fig. 2) in one direction or the other, until distant objects observed through the viewfinder appear sharp. One or two rotations of the viewfinder lens have a significant effect on image focus.
3. Once correct focus is reached, lock the focus in place by threading the knurled lock-ring snugly clockwise up against the viewfinder's lens cell.
4. Place the viewfinder into the viewfinder bracket (5, Fig. 2) on the main telescope. Gently tighten the six alignment screws (4 and 6, Fig. 2), then proceed with alignment of the viewfinder.

b. Alignment of the Viewfinder

In order for the viewfinder to be useful, it must first be aligned with the main telescope, so that both the viewfinder and the main telescope are pointing at precisely the same place. To align the viewfinder follow this procedure:

1. The viewfinder bracket (5, Fig. 2) includes six alignment screws (4 and 6, Fig. 2). Turn the 3 rear-most alignment screws (6, Fig. 2) so that the viewfinder tube is roughly centered within the viewfinder bracket, as

viewed from the eyepiece-end of the telescope.

Note: Do not overtighten the alignment screws. When tightening one screw it may be necessary to loosen one of the two other screws.

2. Using the SP 26mm eyepiece, point the main telescope at some easy-to-find, well-defined land object, such as the top of a telephone pole. Center the object precisely in the main telescope's field and engage the R.A. Lock and Dec Lock so that the object can not move in the field.
3. While looking through the viewfinder, turn one or more of the 3 front-most viewfinder alignment screws (4, Fig. 2), until the crosshairs of the viewfinder point at precisely the same position as the main telescope.

Re-check that the viewfinder's crosshairs and the main telescope are now pointing at precisely the same object. The viewfinder is now aligned to the main telescope. Unless the alignment screws are disturbed, the viewfinder will remain aligned indefinitely.

c. Using the Viewfinder

To locate any object, terrestrial or astronomical, first center the object in the crosshairs of the viewfinder; the object will then also be centered in the field of the main telescope. Note: If you intend to use higher observing magnifications, first locate, center, and focus the object using a low-power eyepiece (e.g., the SP 26mm eyepiece). Objects are easier to locate and center at low powers; higher power eyepieces may then be employed simply by changing eyepieces.

OBSERVING OBJECTS

1. Terrestrial Observing

The ETX Astro Telescope makes an excellent, high-resoluton terrestrial (land), telescope. Simply by setting the telescope on its drive base, as shown in Fig. 1, the telescope may be used for an extremely wide range of land observations. Keep in mind, however, that terrestrial images through the ETX Astro Telescope will be right-side-up, but reversed left-for-right. Normally, such an image orientation is not bothersome, unless the observer is trying to read a distant sign, for example. If the telescope is to be used for extensive terrestrial observations, the optional #932 45° Erecting Prism, which yields a correctly oriented image, is recommended.

Viewing terrestrial objects require observers to look along the Earth's surface through heat waves. These heat waves often cause degradation of image quality. Low power eyepieces, like the SP 26mm eyepiece provided with the ETX Astro Telescope, magnify these heat waves less than higher powered eyepieces. Therefore, low power eyepieces provide a steadier, higher quality image. If the land image is fuzzy or ill-defined, drop down to a lower power, where the Earth's heat waves will not have such a deleterious effect on image quality. Observing in early morning hours, before the Earth has built up internal heat, is generally more advantageous than during late-afternoon hours.

a. Mounting for Terrestrial Applications

For use in terrestrial viewing situations the ETX Astro Telescope may be mounted in one of four ways:

1. Set the telescope's drive base on a table or other steady plafform, as discussed immediately above and as shown in Fig. 1.
2. Attach the telescope to the optional Meade ETX Field Tripod as detailed in the instructions included with the tripod and as shown in Figure 5. This tripod was exclusively designed for the ETX Astro Telescope to provide extremely stable mounting not available with standard tripods.

3. Alternately, attach the entire ETX Astro Telescope (including fork mount), to a heavy-duty photo tripod. Attachment to a photo tripod is effected by means of the threaded hole (3, Fig. 3) in the center of the bottom surface of the telescope's drive base. This central hole is threaded with the phototripod-standard 1/4-20 thread. We emphasize, however, that only a strong, heavy-duty photo tripod, designed to accept the weight of the 9 lb. (4.1 kg) ETX Astro Telescope should be used in this application. Check with the tripod manufacturer to confirm that the intended tripod is designed to carry such a weight safely and securely, before mounting the telescope in this way.
4. The optical tube assembly of the ETX Astro Telescope may also be removed from its fork mounting, allowing the tube assembly to be placed directly on to a standard photo tripod. To remove the tube assembly from its fork mount, use one of the hex-wrenches packed with the telescope to unthread the two attachment screws (19, Fig. 1) located on each side of the optical tube's rear cell. Then carefully slide the tube assembly out of the fork arms in the direction of the telescope's eyepiece-end. The ETX's rear-cell includes a tripod adapter plate (8, Fig. 1) for attaching the tube assembly directly to the 1/4-20 thread of any standard photo tripod.

Fig. 5: Mounting the ETX Astro Telescope to the optional ETX Field Tripod.

Never use the ETX telescope to look at the Sun! Observing the Sun, even for the shortest fraction of a second, will cause Instant and Irreversible damage to the eye, as well as physical damage to the telescope itself.

2. Astronomical Observing

Used as an astronomical instrument, the ETX Astro Telescope allows full use of its many optical and electromechanical capabilities. It is in astronomical applications where the ETX's extremely high level of optical performance is readily visible. The range of observable astronomical objects is, with minor qualification, limited only by the observer's motivation. Understanding how and where to locate celestial objects, and how those objects move across the sky is fundamental to enjoying the hobby of astronomy. This section provides a basic introduction to the terminology associated with astronomy, and includes instructions for finding and following celestial objects.

a. Celestial Coordinates

Celestial objects are mapped according to a coordinate system on the Celestial Sphere (Fig. 6), an imaginary sphere surrounding Earth on which all stars appear to be placed. This celestial object mapping system is analogous to the Earth-based coordinate system of latitude and longitude.

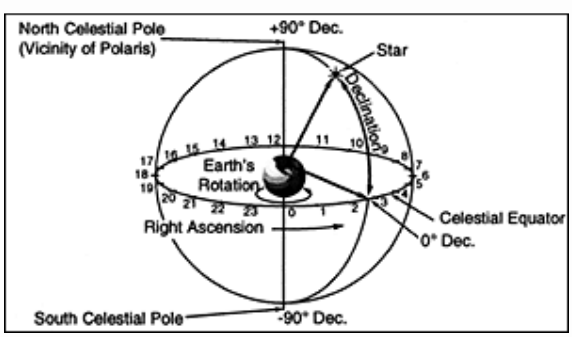

Fig. 6: Celestial Sphere.

The poles of the celestial coordinate system are defined as those two points where the Earth's rotational axis, if extended to infinity, north and south, intersect the celestial sphere. Thus, the North Celestial Pole is that point in the sky where an extension of the Earth's axis through the North Pole intersects the celestial sphere. This point in the sky is located near the North Star, Polaris.

In mapping the surface of the Earth, lines of longitude are drawn between the North and South Poles. Similarly, lines of latitude are drawn in an east-west direction, parallel to the Earth's Equator. The Celestial Equator is a projection of the Earth's Equator onto the celestial sphere.

Just as on the surface of the Earth, in mapping the celestial sphere, imaginary lines have been drawn to form a

coordinate grid. Thus, object positions on the Earth's surface are specified by their latitude and longitude. For example, you could locate Los Angeles, California, by its latitude (+34°) and longitude (1180); similarly, you could locate the constellation Ursa Major (which includes the Big Dipper) by its general position on the celestial sphere:

R.A.: 11hr; Dec: +50°.

1. **Declination:** The celestial analog to Earth latitude is called Declination, or "Dec", and is measured in degrees, minutes and seconds (e.g., 15° 27'33"). Declination shown as north of the celestial equator is indicated with a "+" sign in front of the measurement (e.g., the Declination of the North Celestial Pole is +90°), with Declination south of the celestial equator indicated with a "-" sign (e.g., the Declination of the South Celestial Pole is -90°). Any point on the celestial equator itself (which, for example, passes through the constellations Orion, Virgo and Aquarius) is specified as having a Declination of zero, shown as 0° 0' 0".

2. **Right Ascension:** The celestial analog to Earth longitude is called "Right Ascension," or "R.A.," and is measured in time on the 24 hour "clock" and shown in hours ("hr"), minutes ("min") and seconds ("sec") from an arbitrarily defined "zero" line of Right Ascension passing through the constellation Pegasus. Right Ascension coordinates range from 0hr 0min 0sec to 23hr 59min 59sec. Thus there are 24 primary lines of R.A., located at 15 degree intervals along the celestial equator. Objects located further and further east of the prime Right Ascension grid line (0hr 0min 0sec) carry increasing R.A. coordinates. All celestial objects are specified in position by their celestial coordinates of Right Ascension and Declination. The telescope's R.A. and Dec setting circles (7 and 8, Fig. 7) may be dialed to the coordinates of a specific celestial object, which may then be located without a visual search. However, before you can make use of the telescope's setting circles to locate celestial objects, your telescope must first be polar aligned.

b. Polar Alignment

The Meade ETX can be used for astronomical observations in the same way as just described for terrestrial observations: simply set the telescope on a tabletop, locate objects through the viewfinder, and then observe through the main telescope. Objects can be tracked, or followed, as they move across the sky by turning one or both of the R.A. and Dec Slow-Motion Controls (10 and 16, Fig. 1). Such usage of the telescope, however, is unnecessarily cumbersome, since, by attaching the Table Tripod legs to the ETX and following a procedure called Polar Alignment, the telescope can be made to track objects completely automatically.

As the Earth rotates once on its axis every 24 hours, astronomical objects appear to move across the sky in an arc. This apparent motion is not obvious to the unaided eye, but viewed through a serious telescope such as the ETX, this motion is rapid indeed. If the motor drive has not been engaged, objects centered in the telescope's eyepiece move entirely out of the field of view in 15 to 60 seconds, depending on the magnification employed.

For easy tracking of astronomical objects the ETX should be polar aligned, as follows:

1. Make sure the viewfinder is aligned with the ETX Astro Telescope, as previously described in this manual.

2. Attach the three tripod legs to the drive base of the telescope. (see Fig. 7) Two identical legs thread into the side of the telescope's drive base (first remove the threaded cover-buttons). The third leg, which includes a scribed scale along its length, should be threaded into the center hole of the drive base. The scribed scale reads the latitude of the observing location. Threading in the three legs to a firm feel is sufficient.

3. A small thumbscrew (4, Fig. 7) is attached to the center tripod leg. Loosening this thumbscrew allows the outer section of the leg to slide over the inner section, so that the length of the leg can be extended. Extend the center tripod leg so that the center of the thumbscrew-head is lined up with the latitude of your location on the scale. Then retighten the thumbscrew to a firm feel. Determine the latitude of your observing location from a road map or atlas, or call your local airport; determining your latitude within about one degree is sufficient. The latitudes of major cities

throughout the world are listed later in this manual.

Example: The latitude of New York City is 41°. The center tripod leg should be extended so that the center of the thumbscrew is set next to the 41° reading on the scale. Note: With the center tripod leg threaded fully into the center hole of the drive base, the latitude scale may be at an inconvenient position for reading the latitude scale (e.g., the scale may be facing the drive base). This situation can be remedied as follows:

a. Remove the center tripod leg from the telescope's drive base.
b. Unthread completely the small thumbscrew which locks the leg's inner section to its outer section.
c. Rotate the inner tripod section 180 ° inside the outer section.
d. Replace the thumbscrew which locks the inner section to the outer section.
e. Replace the center leg in the drive base. The latitude scale will now be placed at an easily readable position.

4. Unlock the R.A. Lock and Dec Lock (11 and 21, Fig 1) and rotate the telescope so that it is oriented as shown in Fig. 8. Re-lock the R.A. Lock and Dec Lock. In this orientation the telescope's optical tube is lined up parallel to the tripod's center leg.

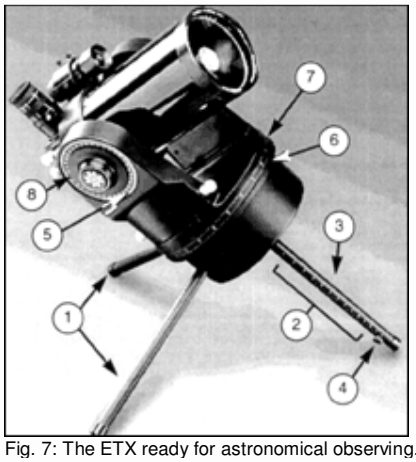

Fig. 7: The ETX ready for astronomical observing. (1) Fixed- length tripod legs; (2) Scribed scale for reading latitude of observing location; (3) Center tripod leg; (4) Thumbscrew for locking extension of center leg; (5) Indicator arrow for Dec. circle; (6) Indicator arrow for R.A. circle; (7) R.A. Setting Circle; (8) Dec. Setting Circle.

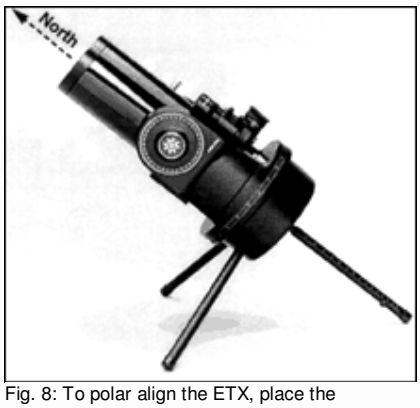

Fig. 8: To polar align the ETX, place the telescope's optical tube parallel to the center tripod leg, as shown. Then lift and orient the entire telescope until the telescope's polar axis (dotted

5. Note the dotted line and arrow extending from the telescope tube in Fig. 8. This line defines the telescope's polar axis. Lift the entire telescope, including tripod, and place the telescope on a tabletop so that this axis is pointed due North. For example, if you know the location of Polaris, the North Star, then point the telescope directly at Polaris. (Fig. 9)

Note: Observers located in the Earth's southem hemisphere (e.g., South America, Australia, etc.) should point the telescope's polar axis due South.

arrow) points due North.

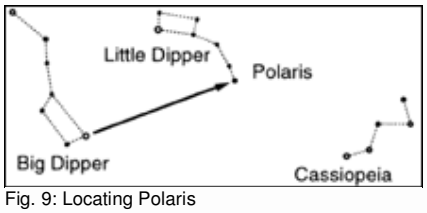

Fig. 9: Locating Polaris

6. From this point on, only move the telescope using the R.A. and Dec controls. Any other movement of the telescope will nullify the polar alignment procedure.

Polar alignment of the telescope thus requires two procedures: extending the center tripod leg to the correct latitude position and pointing the telescope's polar axis due North.

The center tripod leg has a latitude range of from 27.5° to 42.5°. Observers located at latitudes higher than 42.5° may achieve equatorial alignment by placing the center tripod leg in the upper hole position (2, Fig. 3). Polar alignment may in this way be achieved to latitudes as high as 48°. Note, however, that the latitude scale on the center tripod leg no longer is valid when the leg is placed in the upper hole position. In this case the center tripod leg should be extended until the telescope's polar axis points to Polaris, or due North, an alignment obtained by sighting along the telescope tube with the telescope oriented as shown in Fig. 8.

If the observing location is at latitudes below 27.5°, the telescope can be polar aligned by placing the center tripod leg in the lower hole position (4, Fig. 3). Again, polar alignment can be obtained by sighting along the telescope tube, per the orientation in Fig. 8, and extending the center tripod leg so that the telescope's polar axis points to Polaris. Polar alignment at latitudes as low as 22° may be achieved in this way. If your observing latitude is higher than 48°, the optional High-Latitude Tripod Leg, is available and allows for polar alignment as high as 66° latitude.

Important note: For almost all astronomical observing requirements approximate settings of the telescope's latitude and polar axis are acceptable! Do not allow undue attention to precise polar alignment of the telescope interfere with your basic enjoyment of the instrument.

c. Alternate Polar Alignment Procedure

If desired, more precise polar alignment (particularly if your latitude requires that you use the upper or lower hole positions, (2 and 4, Fig. 3) for attachment of the center tripod leg) may be obtained by first orienting the telescope as shown in Fig. 8. Use the R.A. Slow-Motion Control (10, Fig. 1) to move the telescope so that the eyepiece is positioned as shown in Fig. 8. Then follow this procedure:

1. Align the telescope's optical tube by your eye so that it is parallel to the telescope's center tripod leg. Use the Dec Slow-Motion Control (16, Fig. 1) to make the optical tube and center tripod leg as nearly parallel to each other as your eye can detect, as shown in Fig. 8.
2. Lift the entire telescope, including tripod, and place it on the observing table so that the telescope's polar axis (dotted arrow in Fig. 8) is pointing due North.
3. While observing through the SP 26mm eyepiece of the main telescope, adjust the length of the center tripod leg until Polaris is visible in the eyepiece. Do not use the R.A. and Dec Slow-Motion Controls. Instead, use a combination of (a) lifting and turning the entire telescope (or nudging the position of one of the fixed tripod legs) and (b) adjusting the length of the center tripod leg to place Polaris in the center of the telescope's field.

Although the above procedure is somewhat tedious (since the actual field of view of the main telescope with the SP 26mm eyepiece in place is only about 1°), it is a worthwhile effort if fairly precise polar alignment is desired (e.g., if photography of the Moon or a planet is to be performed.) With Polaris placed in the center of the telescope's field, the telescope will be polar aligned within about one or two degrees - a level of alignment precision more than sufficient for almost any observing application.

To provide the most stable platform from which to polar align your ETX Astro Telescope you may wish to purchase the ETX Field Tripod (Fig. 5). The tripod head tilts easily to your local latitude angle for quick polar alignment, and locks in a 90° position to facilitate terrestrial viewing.

d. Locating Astronomical Objects

Now that your telescope is fully assembled and polar aligned, you are ready to begin observations.

For the beginning amateur astronomer, the simplest method of locating objects in the night sky - and an excellent way to learn how to operate your telescope - is to look at a celestial object that can be clearly seen with your own eyes.

To move the telescope freely in R.A and Dec, first loosen both the R.A. and Dec Locks (11 and 21, Fig. 1). Find the desired object in the viewfinder, center the object in the viewfinder's crosshairs, then observe through the main telescope's eyepiece. Tighten the R.A. and Dec locks. Then, adjust the focus knob until the image is clear and sharp.

The positions of celestial objects change over the course of the year, so you should obtain a star chart (such as the Meade Star Charts, available from your Meade dealer) or refer to the monthly star charts presented in astronomy magazines, such as *Sky & Telescope* and *Astronomy*.

Once the object is centered in the eyepiece, it is necessary to slowly turn the R.A. Slow-Motion Control (10, Fig. 1) to keep the object in the field of view. However, once the telescope is polar aligned, the motor drive (described below) may be used to automatically track on the object.

e. The Motor Drive

The ETX Astro Telescope is driven by a DC electronic motor control system, powered by three AA-size batteries located inside the telescope's drive base (see GETTING STARTED).

To use the motor drive, follow this procedure:

1. With the telescope polar aligned as described above, turn the motor drive on, using the switch (8, Fig. 3) located on the bottom of the drive base.
2. Northen/Southern Hemisphere Operations: Observers located in the Earth's northern hemisphere (e.g., North America, Europe, Japan) should place the N-S switch (7, Fig. 3) permanently in the "N" (north) position. Observers in the Earth's southern hemisphere (e.g., Australia and most of South America) should place this switch in the "S" position, resulting in motor drive operation in the opposite direction.
3. After switching the motor drive on, allow one minute for the drive to take up any internal gear-backlash. During this initial one minute period, the motor drive is non-operative.
4. Now, as you move the telescope from object to object, the motor drive will automatically track, or follow, the object, fully compensating for the effects of the Earth's rotation. When each new object is centered in the telescope's field, the R.A. Lock and Dec Lock should be locked; the motor drive takes hold within a few seconds after the R.A. Lock is locked.

f. Setting Circles

The ETX is equipped with R.A. and Dec Setting Circles (15 and 18, Fig. 1). To aid the observer in the location of faint celestial objects, setting circles emulate the celestial coordinates found on star charts and in sky catalogs. Any charted object can be easily located by their R.A. (in hours, minutes, and seconds, from Oh 0m 0sec to 23h 59m 59sec) and Dec (from 0° to ±90°) coordinates.

With the ETX telescope polar aligned, turning the R.A. SlowMotion Control (10, Fig. 1) moves the telescope in Right Ascension; turning the Dec Slow-Motion Control (16, Fig. 1) moves the telescope in Declination.

The Dec setting circle has been factory set to read the correct Declination of sky objects, but this setting should be re-checked the first time the setting circles are used. With the telescope polar aligned, point the telescope as shown in Fig. 8 and center the North Star, Polaris (Fig. 9), in the telescopic field. Polaris has a Declination of 89.2°. With Polaris centered in the field of view, both Dec setting circles should therefore read 89.2°, using the small indicator arrow (5, Fig. 7) located immediately under each Declination circle. The Dec setting circles can be moved by slightly unthreading their cover plates, adjusting the circle positions, and then retightening the cover plates.

Since celestial objects move in Right Ascension, the R.A. setting circle must be set as each object is located during an observing session. This point is explained in more detail below.

Note that the R.A. circle has two rows of numbers from 0 to 23, corresponding to the hours of a 24-hour clock. The upper row of numbers should be used by observers in the Earth's northern hemisphere, the lower row by observers in the Earth's southern hemisphere.

The indicator arrow (6, Fig. 7) for the R.A. setting circle is located on the opposite side of the drive base from the position where the two fixed table tripod legs attach and immediately under the R.A. circle.

To use the setting circles, the ETX must first be polar aligned; it is advisable that the motor drive be turned on and that a lowpower eyepiece (e.g., the SP 26mm eyepiece) be employed. Then follow this procedure:

1. Identify the celestial coordinates (R.A. and Dec) of a bright, easy-to-find object, such as a bright star. (Avoid using Polaris or any object near Polaris.) Coordinates of some bright stars are listed further on in this manual, or use a sky catalog. Center this object in the telescope's field of view.
2. Manually turn the R.A. circle (Fig. 10) to read the R.A. of the object.
3. The R.A. circle is now calibrated to read the correct R.A. of any object at which the telescope is pointed. The Dec circle is already calibrated as described above.
4. Without touching the setting circles, move the telescope (manually, by unlocking the R.A. and Dec Locks, or by using the R.A. and Dec Slow-Motion Controls) so that the setting circle indicators (5 and 6, Fig. 7) read the R.A. and Dec coordinates of a second object that you wish to locate.
5. If the above procedure has been followed carefully, the second object will now be in the telescope's field of view.

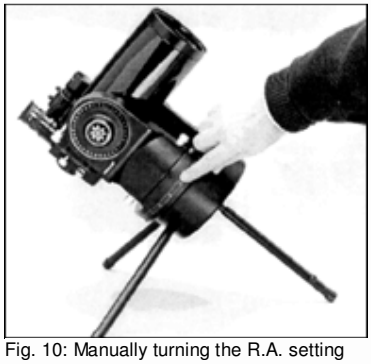

Fig. 10: Manually turning the R.A. setting circle to read the Right Ascension of an object.

Note: Since the second object (i.e., the object to be located) is in constant motion, once the R.A. circle is calibrated (step 2, above), the telescope should be moved rapidly to read the coordinates of the second object. Otherwise the second object will no longer be in the position indicated by the R.A. circle.

Using setting circles requires a developed technique. When using the circles for the first time, try hopping from one bright star (the calibration star) to another bright star of known coordinates. Practice moving the telescope from one easy-to-find object to another easy-to-find object. In this way the precision required for accurate object location will become evident.

g. Photography Through the ETX Astro Telescope

Photography through the ETX Astro Telescope requires the addition of the optional #64 T-Adapter (see OPTIONAL ACCESSORIES, page 14). With the #64 T-Adapter attached to the telescope (Fig. 11), through-the-telescope photography is possible with any 35mm camera body with removable lens. In this way the telescope effectively becomes the lens of the camera.

For through-the-telescope photography, turn the Flip-Mirror Control, (5, Fig. 11) to the "down" position, allowing light to pass straight through the telescope and out the Photo Port (6, Fig. 1). With the Flip-Mirror Control in the "down" position and the Photo Port's dust cover removed, the front lens of the telescope can be seen when looking

through the Photo Port. The #64 T-Adapter threads on to the Photo Port, followed by a T-Mount for the particular brand of 35mm camera being used, followed in turn by the camera body itself (with camera lens removed).

Note that the #64 T-Adapter consists of two sections (1 and 2, Fig. 11) which are threaded together in shipment. Either of the following photographic mounting formats may be used to couple the camera body to the telescope's Photo Port thread.

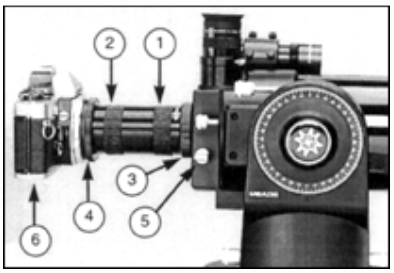

Fig. 11: Using the #64 T-Adapter. (1) Short section of #64 T-Adapter; (2) Extension section of #64 T-Adapter; (3) Knurled attachment ring; (4) T-Mount; (5) Flip-Mirror Control in "down" position; (6) 35mm camera body.

Format 1: Camera Body + T-Mount + Section (1) of the #64 TAdapter.

Format 1 utilizes the short section only of the #64 T-Adapter to permit close-coupling of a camera body to the telescope at an effective photographic speed of f/14 and a transmission value (the so-called "T"-value) of 18. In this format vignetting will occur: the photographic image will appear on film as a circle, without illuminating the complete 35mm frame.

Format 2: Camera Body + T-Mount + Sections (1) and (2) of the #64 T-Adapter.

Format 2 utilizes both sections of the #64 T-Adapter threaded together to form a rigid unit as shown in Fig. 11, the telescope is operating at a photographic speed of f/16 and T-value of 23, but without any field vignetting: images are illuminated to the edges of a standard 35mm frame.

To frame an object in the viewfinder of the 35mm camera body, loosen slightly the knurled ring (3, Fig. 11) which threads the #64 T-Adapter to the telescope's Photo Port; rotate the camera body to achieve proper framing of the object; then re-tighten the knurled ring.

Photography through a long lens such as the ETX requires special technique for good results, and the photographer should probably expect to waste a roll or two of film in acquiring this technique. Long-lens photography has its own rewards, however; rewards that short-focus lenses can not duplicate.

A few tips on photography through the ETX:

1. Use a rigid tabletop or the optional Meade ETX Field Tripod as a platform for the telescope. At effective focal lengths of 1250mm to 1450mm, even small external vibrations can easily ruin an otherwise good photo.
2. Use a cable-operated shutter release. Touching the camera body to initiate shutter operation will almost certainly introduce undesirable vibrations.
3. Focus the image with extreme care. While observing the subject through the camera's reflex viewfinder, turn the ETX's focus knob (5, Fig. 1) to achieve the sharpest possible focus.
4. Correct shutter speeds vary widely, depending on lighting conditions and the film used. Trial-and-error is the best way to determine proper shutter speed in any given application.
5. Terrestrial photography through the ETX is sensitive to heat waves rising from the Earth's surface. Long distance photography is best accomplished in the early morning hours, before the Earth has had time to build up heat.
6. Photography of the Moon and planets through the ETX can be especially gratifying, but points 1 through 4 should be particularly noted in this case. Lunar or planetary photography requires that the telescope be polar aligned and that the telescope's motor drive be in operation.

Note that long-exposure photography of deep-space objects is not practical with the ETX, since this type of photography requires special electronic and optical guiding devices not available for this telescope.

h. Objects In Space

Listed below are just some of the many astronomical objects that can be seen with your ETX Astro Telescope:

1. The Moon

The Moon is, on average, a distance of 230,000 miles (370,000km) from Earth and is the easiest object to view at night. It is best observed during its crescent or half phase, when sunlight strikes its surface at an angle, casting shadows and adding a sense of depth to your view. No shadows are seen during a full Moon, causing the overly bright Moon to appear flat. Using your new ETX Astro Telescope, you can see brilliant detail on the Moon, including many hundreds of lunar craters and maria, described below:

Craters are round meteor impact sites covering most of the Moon's surface. With no atmosphere on the Moon, no weather conditions exist to erode the craters. Thus, lunar craters can last for millions of years. Maria (plural for mare) are smooth, dark areas scattered across the lunar surface. These dark areas are thought to be ancient impact craters that were filled with lava from the interior of the Moon.

In the late 1960's and early 1970's, a total of 12 Apollo astronauts left their footprints on the Moon. However, no telescope on Earth is able to see these footprints. In fact, the smallest lunar feature that can be seen with the largest telescope on Earth is about half a mile across. Note: Except during its early crescent phase, the Moon can be an exceptionally bright object to view through your telescope. To reduce the brightness and glare the optional #905 Variable Polarizing Filter is recommemded.

2. Planets

Planets change positions in the sky as they orbit around the Sun. To locate the planets on a given day or month, consult a monthly astronomy magazine, such as *Sky and Telescope* or *Astronomy*. Listed below are the best planets for viewing through your ETX Astro Telescope.

Venus is about nine-tenths the diameter of Earth. As Venus orbits the Sun, observers can see it go through phases (crescent, half, and full) much like those of the Moon. The disk of Venus appears white as sunlight is reflected off its thick cloud cover.

Mars is about half the diameter of Earth. Mars appears as a tiny reddish-orange dot. It may be possible to see a hint of white at one of the planet's polar ice caps. When Mars is closest to Earth, additional detail on the planet's surface may be visible.

Jupiter is 11 times the diameter of Earth. This large planet appears as a disk with several dark lines stretching across its surface. These dark lines are cloud bands in Jupiter's atmosphere. Four of Jupiter's 16 moons (Io, Europa, Ganymede, and Callisto) can be seen as "star-like" points of light. Just as Earth's Moon travels around Earth, Jupiter's moons circle around Jupiter. As a result, the number of moons visible at any given time changes as they orbit in front of, or behind, the giant planet.

Jupiter is the largest planet in the Solar System. While Jupiter's disk may look small through the telescope, keep in mind that over 1000 Earths could fit inside the planet.

Saturn is nine times the diameter of Earth and appears as a small, round disk with rings extending out from either side. In 1610, Galileo, the first person to observe Saturn through a telescope, didn't understand what the rings were and believed instead that Saturn had "ears." Saturn's rings are made of billions of ice particles ranging in size from a speck of dust to the size of a house. The major division in Saturn's rings, called the Cassini Division, is generally visible through the ETX. Titan, the largest of Saturn's 18 moons can also be seen through the ETX as a bright, starlike object near the planet.

3. Deep-Sky Objects

Beyond Our Solar System, star charts can be used to locate constellations, individual stars and deep-sky objects. Examples of various deep-sky objects are given below:

Stars are large globes of incandescent gases. Because of their vast distances from our Solar System, all stars appear as pinpoints of light, irrespective of the size of the telescope used.

Diffuse Nebulae are clouds of dust and gas where stars are formed. The Great Nebula in Orion (M42) is a diffuse nebula that appears as a faint wispy gray cloud. M42 is 1600 light years in distance from Earth.

Galaxies are large groupings of stars, nebulae, clusters, and more. The most common shape is spiral, but galaxies also are elliptically-shaped, or even seen as irregular blobs. The Andromeda Galaxy (M31) is the closest spiral-type galaxy to the Milky Way. This galaxy appears faint, fuzzy, and cigar-shaped, is 2.2 million light years away and is a fascinating object to see through the ETX.

Open Clusters are loose groupings of young stars, all recently formed from the same diffuse nebula. The Pleiades (M45) in Taurus is an open cluster. M45 is 410 light years away. Through the ETX several hundred stars are visible in the Pleiades.

Constellations are large, imaginary groupings of stars and are too large to be seen through a telescope To learn the constellations, start with an easy grouping of stars, like the Big Dipper in Ursa Major. Then, use a star chart to find your way from there.

3. Helpful Charts

a. Latitudes of the World

To aid in the polar alignment procedure, previously described in this manual, latitudes of major cities around the world are listed below. To determine the latitude of an observing site not listed on the chart, locate the city closest to your site.

Northern hemisphere observers (N): If your site is over 70 miles (110 km) north of the listed city, add one degree for every 70 miles. If your site is over 70 miles south of the listed city, subtract one degree per 70 miles.

Southern hemisphere observers (S): If your site is over 70 miles north of the listed city, subtract one degree for every 70 miles. If your site is over 70 miles south of the listed city, add one degree per 70 miles.

UNITED STATES

City	State	Latitude
Albuquerque	New Mexico	35° N
Anchorage	Alaska	61° N
Atlanta	Georgia	34° N
Boston	Massachusetts	42° N
Chicago	Illinois	42° N
Cleveland	Ohio	41° N
Dallas	Texas	33° N
Denver	Colorado	40° N
Detroit	Michigan	42° N
Honolulu	Hawaii	21° N
Jackson	Mississippi	32° N
Kansas City	Missour	39° N
Las Vegas	Nevada	36° N
Little Rock	Arkansas	35° N
Los Angeles	California	34° N
Miami	Florida	26° N
Milwaukee	Wisconsin	46° N
Nashville	Tennessee	36° N
New Orleans	Louisiana	30° N
New York	Now York	41° N
Oklahoma City	Oklahoma	35° N
Philadelphia	Pennsylvania	40° N

Phoenix	Arizona	33° N
Portland	Oregon	46° N
Richmond	Virginia	37° N
Salt Lake	City Utah	41° N
San Antonio	Texas	29° N
San Diego	California	33° N
San Francisco	California	38° N
Seattle	Washington	47° N
Washington	District of Columbia	39° N
Wichita	Kansas	38° N

EUROPE

City	State	Latitude
Amsterdam	Netherlands	52° N
Athens	Greece	38° N
Bern	Switzerland	47° N
Copenhagen	Denmark	56° N
Dublin	Ireland	53° N
Frankfurt	Germany	50° N
Glasgow	Scotland	56° N
Helsinki	Finland	60° N
Lisbon	Portugal	39° N
London	England	51° N
Madrid	Spain	40° N
Oslo	Norway	60° N
Paris	France	49° N
Rome	Italy	42° N
Stockholm	Sweden	59° N
Vienna	Austria	48° N
Warsaw	Poland	52° N

SOUTH AMERICA

City	State	Latitude
Asuncion	Paraguay	25° S
Brasilia	Brazil	24° S
Buenos Aires	Argentina	35° S
Montevideo	Uruguay	35° S
Santiago	Chili	34° S

ASIA

City	State	Latitude
Beijing	China	40° N
Seoul	South Korea	37° N
Taipei	Taiwan	25° N
Tokyo	Japan	36° N
Victoria	Hong Kong	23° N

AFRICA

City	State	Latitude
Cairo	Egypt	30° N
Cape Town	South Africa	34° S

Rabat	Morocco	34° N
Tunis	Tunisia	37° N
Windhoek	Nambia	23° S

AUSTRALIA

City	State	Latitude
Adelaide	South Australia	35° S
Brisbane	Queensland	27° S
Canberra	New South Wales	35° S
Alice Springs	Northern Territory	24° S
Hobart	Tasmania	43° S
Perth	Western Australia	32° S
Sydney	New South Wales	34° S
Melbourne	Victoria	38° S

1b. Star Locator

Following are a list of bright stars and their R.A. and Dec coordinates. Once your telescope is polar aligned, use the R.A. and Dec setting circles to explore the sky.

Season	Star Name	Constellation	R.A.	Dec
Spring	Arcturus	Bootes	14h16m	19° 11"
Spring	Regulus	Leo	10h09m	11° 58"
Spring	Spica	Virgo	13h25m	-11° 10"
Summer	Vega	Lyra	18h37m	38° 47"
Summer	Deneb	Cygnus	20h41m	45° 17"
Summer	Altair	Aquilla	19h51m	08° 52"
Summer	Antares	Scorpious	16h30m	-26° 26"
Fall	Markab	Pegasus	23h05m	15° 12"
Fall	Fomalhaut	Piscis Austrinis	22h58m	-29° 38"
Fall	Mira	Cetus	02h19m	-02° 58"
Winter	Rigel	Orion	05h15m	-08°12"
Winter	Betelguese	Orion	05h55m	7° 25"
Winter	Sirius Canis	Major	06h45m	-16° 43"
Winter	Aldebaran	Taurus	04h35m	16° 31"

TELESCOPE MAINTENANCE AND SERVICING

1. General Maintenance

The ETX Telescope is a precision optical instrument designed to yield a lifetime of rewarding applications. Given the care and respect due any precision instrument, the ETX will rarely, if ever, require factory servicing or maintenance. Maintenance guidelines include:

a. Avoid cleaning the telescope's optics: a little dust on the front surface of the telescope's correcting lens causes virtually no degradation of image quality and should not be considered reason to clean the lens.
b. When absolutely necessary, dust on the front lens should be removed with gentle strokes of a camel hair brush or blown off with an ear syringe (available at any pharmacy).
c. Organic materials (e.g., fingerprints) on the front lens may be removed with a solution of 3 parts distilled water to 1 part isopropyl alcohol. You may also add 1 drop of biodegradable dishwashing soap per pint of soluton. Use soft, white facial tissues and make short, gentle strokes. Change tissues often.

CAUTION: Do not use scented or lotioned tissues or damage could result to the optics

d. In the very rare situation where cleaning the inside surface of the corrector lens becomes necessary, unthread the lens cell located at the front of the main tube. The entire correcting lens and secondary mirror system is mounted in this cell. The lens cleaner solution described in Step c. may be used to clean the inside surface of the lens. DO NOT use a commercial photographic lens cleaner

   CAUTION: Do not touch the aluminized circular surface of the secondary mirror with your finger, a tissue, or any other object. Scratching of the mirror surface will otherwise almost certainly result

   Note: When cleaning the inside surface of the correcting lens, leave the lens mounted in its metal cell throughout the process. Do not remove the lens from its metal housing or else optical alignment of the lens will be lost, necessitating a return of the telescope to the Meade factory.

e. If the ETX is used outdoors on a humid night, water condensation on the telescope surfaces will probably result. While such condensation does not normally cause any damage to the telescope, it is recommended that the entire telescope be wiped down with a dry cloth before the telescope is packed away. Do not, however, wipe any of the optical surfaces. Rather, simply allow the telescope to sit for some time in the warm indoor air, so that the wet optical surfaces can dry unattended.
f. If the ETX Telescope is not to be used for an extended period, perhaps for one month or more, it is advisable to remove the three AA-batteries from inside the drive base. Batteries left in the circuit board for prolonged periods may leak, causing damage to the telescope's electronic circuitry.
g. The super-gloss anodized finish of the ETX's deep-violet optical tube will fade if left in direct sunlight for prolonged periods.
h. Do not leave the ETX telescope inside a sealed car on a warm summer day; excessive ambient temperatures can damage the telescope's internal lubrication and electronic circuitry.

A set of three (English-format) hex wrenches is provided with each ETX Astro Telescope. These wrenches are used as follows:

Small wrench (.050"): Use the small wrench to tighten the set-screws of any knobs which may loosen (e.g., the Dec Slow-Motion Control knob, Focus knob, R.A. Lock, R.A. Slow-Motion Control knob, or Flip-Mirror Control knob).
Medium wrench (1/16"): This wrench is used to detach the viewfinder bracket from the telescope's rear-cell.
Large wrench (7/64"): The large wrench is used to detach the ETX optical tube assembly from its fork mount, permitting placement of the tube assembly on a standard photo tripod.

2. Storage and Transport

When not in use, store the telescope in a cool, dry place. Do not expose the instrument to excessive heat or moisture. It is best to store the telescope in its original box. If shipping the telescope, use the original box and packing material to protect the telescope during shipment. When transporting the telescope, take care not to bump or drop the instrument; this type of abuse can damage the optical tube and/or the objective lens.

3. Inspecting the Optics: A Note About the "Flashlight" Test:

If a flashlight or other highintensity light source is pointed down the main telescope tube, the view (depending upon the observer's line of sight and the angle of the light) may reveal what appears to be scratches, dark or bright spots, or just generally uneven coatings, giving the appearance of poor quality optics. These effects are only seen when a high intensity light is transmitted through lenses or reflected off the mirrors, and can be seen on any high quality optical system, including giant research telescopes.

The optical quality of a telescope cannot be judged by the "flashlight" test; the true test of optical quality can only be conducted through careful star testing.

4. Troubleshooting

The following suggestions may be helpful if you are having difficulty observing objects through the ETX Astro

Telescope:

a. Confirm that all the lens covers have been removed from the telescope.
b. Confirm that the Flip-Mirror Control (7, Fig. 1) is in the "up" position if using the Eyepiece Holder (4, Fig. 1) so light is directed to the eyepiece (1, Fig. 1). Confirm that the FlipMirror Control is in the "down" position if using the #932 Erecting Prism or doing photography with the ETX.
c. If you are new to stargazing, first locate and focus on bright objects, such as the Moon, or a bright star or planet, to acquaint yourself with the sky.
d. When objects appear in the viewfinder but not in the telescope, the viewfinder is not properly aligned with the telescope. Before the ETX is used the first time, the viewfinder must be aligned to the main telescope. Once aligned, locate objects in the viewfinder first, then move to the main telescope.
e. Air conditions inside a warm house or building may distort terrestrial or celestial images and make it difficult, if not impossible, to obtain a sharp focus. For optimal viewing, use the telescope outside in the open air instead of observing through an open or closed window or screen.
f. For clear viewing of objects, turn the focus knob (5, Fig. 1) slowly since the "in-focus" point of a telescope is precise.
g. The optics within your telescope need time to adjust to the outside ambient temperature to provide the sharpest image. To "cool down" the optics, set your telescope outside for 10 to 15 minutes before you begin observing.

5. Meade Customer Service

If you have a question concerning your ETX telescope, call Meade Instruments Customer Service Department at (949) 451-1450, or fax at (949) 451-1460. Customer Service hours are 8:30AM to 4:30PM, Pacific Time, Monday through Friday. In the unlikely event that your ETX requires factory servicing or repairs, write or call the Meade Customer Service Department first, before returning the telescope to the factory, giving full details as to the nature of the problem, as well as your name, address, and daytime telephone number. The great majority of servicing issues can be resolved by telephone, avoiding return of the telescope to the factory.

Specifications:

Optical Design	Maksutov-Cassegrain catadioptric
Primary Mirror Diameter	96mm (3.78")
Clear Aperture	90mm (3.5")
Focal Length	1250mm
Focal Ratio (photographic speed)	f/1 3.8
Near Focus (approx.)	11.5 ft. (3.5m)
Resolving Power (arc sees.)	1.3
Super Multi-Coatings (EMC)	Standard
Limiting Visual Steller Magnitude (approx.)	11.7
Image Scale	1.16°/inch
Maximum Practical Visual Power	325X
Optical Tube Dimensions (dia. x length)	4. 1" x 11" (1 0.4cm x 27.9cm)
Secondary Mirror Obstruction (dia.; %)	1.1" (27.9mm); 9.6%
Telescope Mounting	Fork type; double tine
Setting Circle Diameters	Dec: 3.5"; R.A.: 7"
RA Motor Drive System	4.5-volts DC
Hemispheres of Operation	North and South, switchable
Slow-Motion Controls	Manual, R.A. and Dec
Bearings	R.A. and Dec.: Nylon
Materials: Tube body	Aluminum
Mounting	High-impact ABS, steel reinforced
Primary Mirror	Pyrex® glass
Correcting Lens	BK7 optical glass, Grade-A
Telescope Dimensions	15" x 7.3" x 8.5" (38cm x 18.5cm x 21.6cm)
Telescope (Incl. tabletop tripod) Net Weight	9.2 lbs. (4.2 kg)
Telescope Shipping Weight	12.4 lbs. (5.6kg)